Sunflower Fuzz

Revised 8/16/23

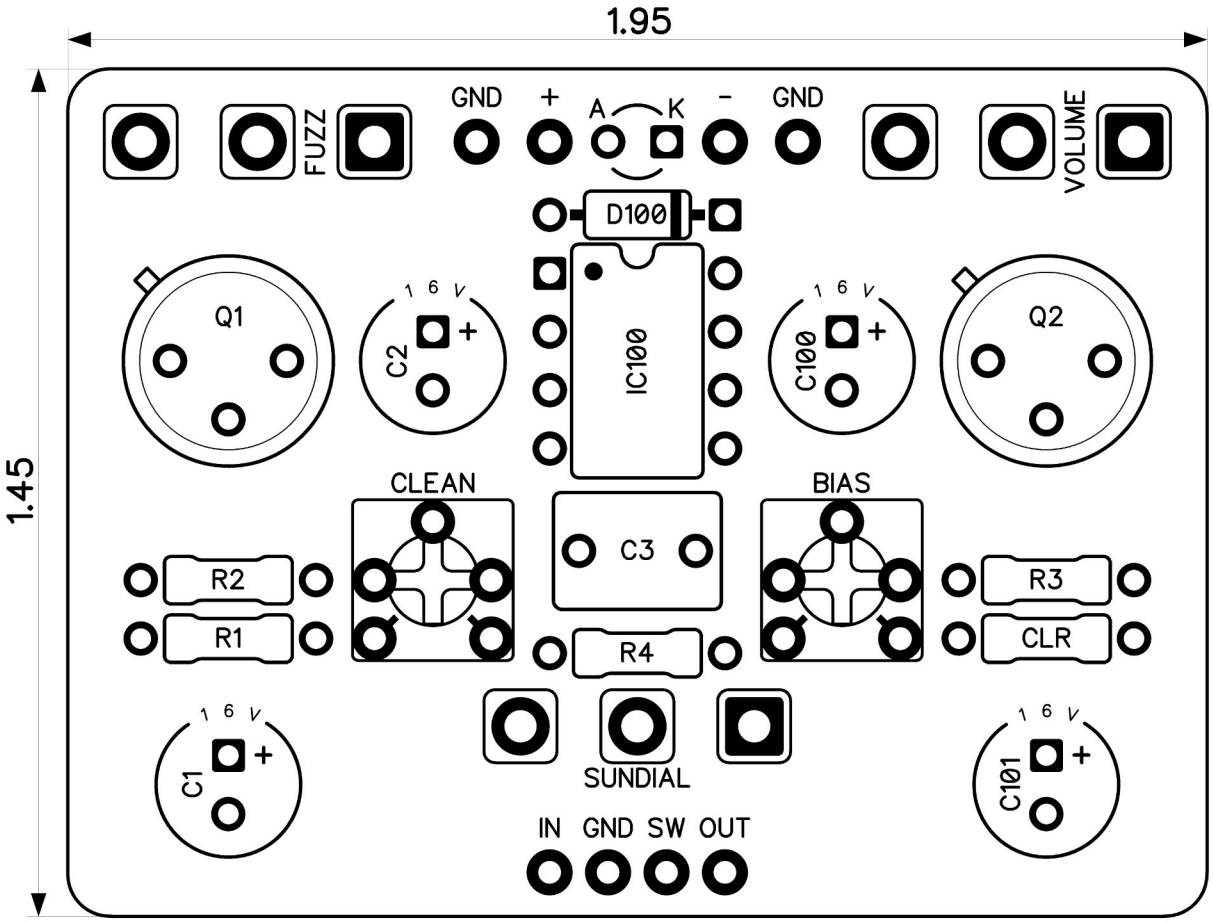

CONTROLS AND FEATURES

- **Volume**
- **Fuzz**
- **Sundial**
- **Bias (Internal trim pot)**
- **Clean (Internal trim pot)**

All trademarks and registered trademarks are the property of their respective owners. The company, product, and service names used in this web site are for identification purposes only. Use of these names, logos, and brands does not imply endorsement.

PedalPCB

Sunflower Fuzz

Parts List (Page 1 of 1)

LOCATION	VALUE	TYPE	NOTES
R1	100K	Resistor, 1/4W	
R2	33K	Resistor, 1/4W	
R3	1K	Resistor, 1/4W	
R4	470R	Resistor, 1/4W	
CLR	4K7	Resistor, 1/4W	** LED current limiting resistor*
C1	1u	Electrolytic capacitor, 5mm	
C2	22u	Electrolytic capacitor, 5mm	
C3	10n	Film capacitor, 7.2 x 2.5mm	
C100	10u	Electrolytic capacitor, 5mm	
C101	47u	Electrolytic capacitor, 5mm	
D100	1N5817	Schottky diode, DO-41	
Q1	NKT275	Germanium Transistor, PNP	
Q2	NKT275	Germanium Transistor, PNP	
IC1	TC1044SCPA	Charge pump IC, DIP8	
BIAS	5K	Trimmer potentiometer, 3362P type	
CLEAN	50K	Trimmer potentiometer, 3362P type	
VOLUME	A250K	16mm right-angle PCB mount pot	
FUZZ	B1K	16mm right-angle PCB mount pot	
SUNDIAL	B5K	16mm right-angle PCB mount pot	

Copyright © 2023 - PedalPCB.com

Sunflower Fuzz

Schematic Diagram

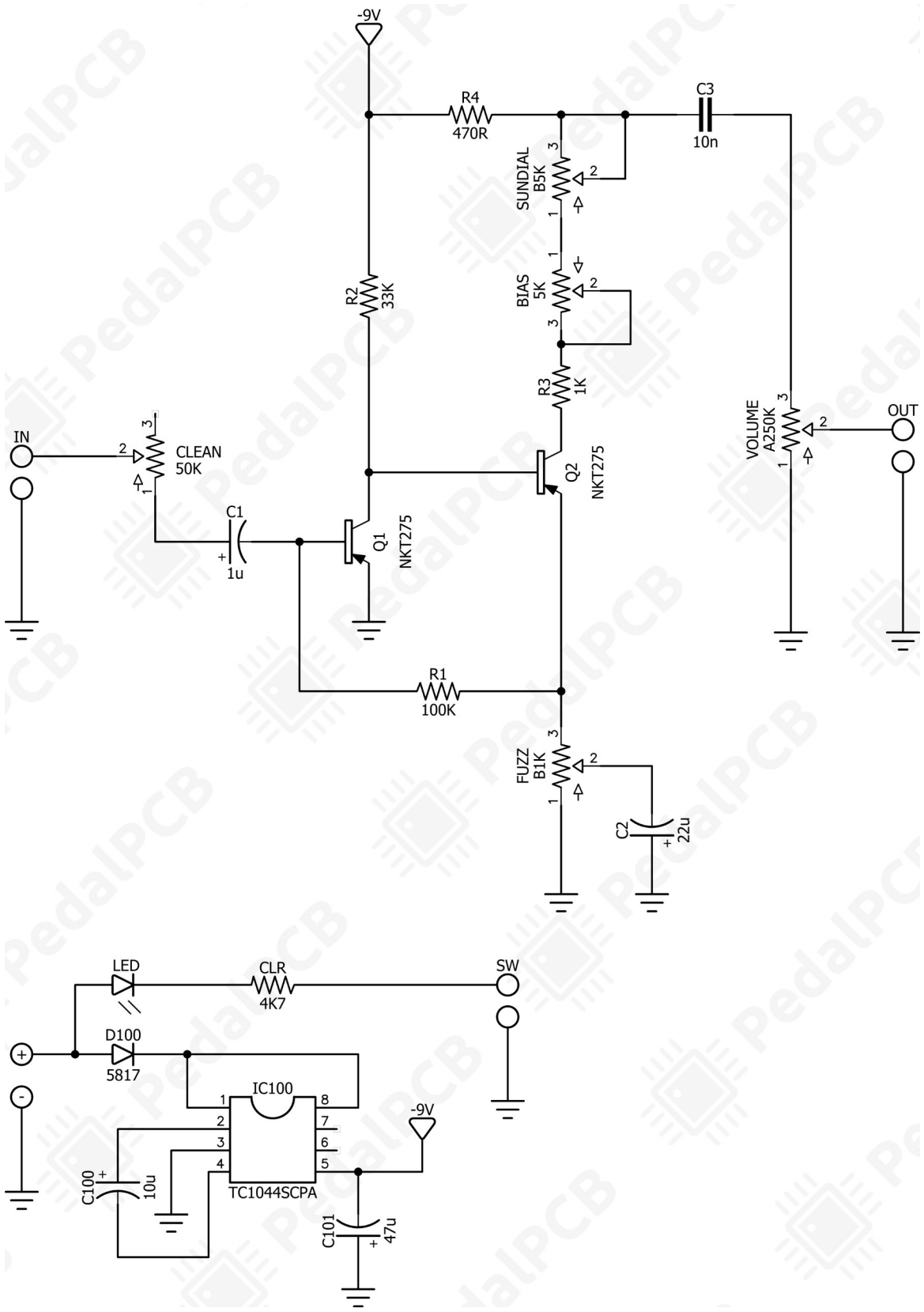

Copyright © 2023 - PedalPCB.com

PedalPCB

Sunflower Fuzz

Wiring Diagram

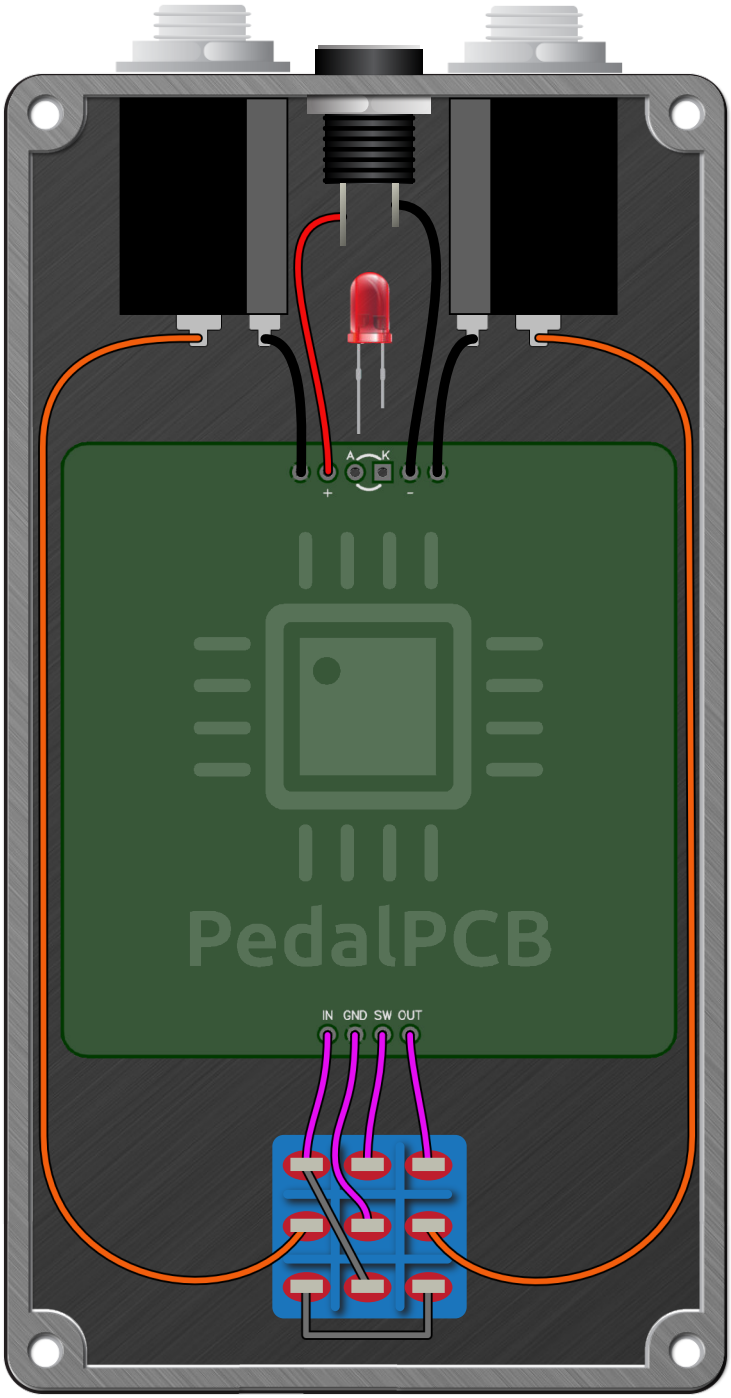

Copyright © 2023 - PedalPCB.com

PedalPCB

Sunflower Fuzz

Drill Template

125B Enclosure

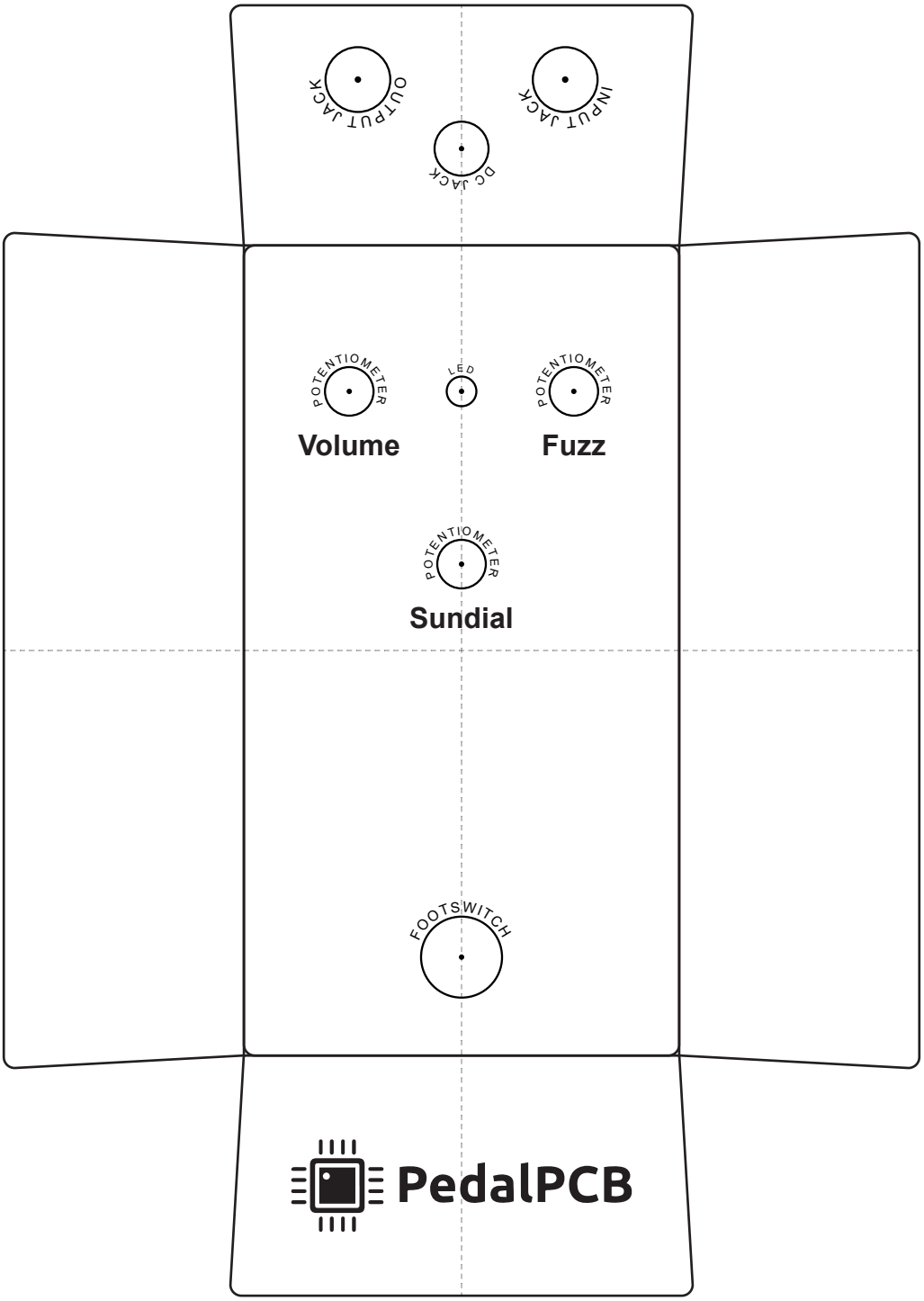

Copyright © 2023 - PedalPCB.com