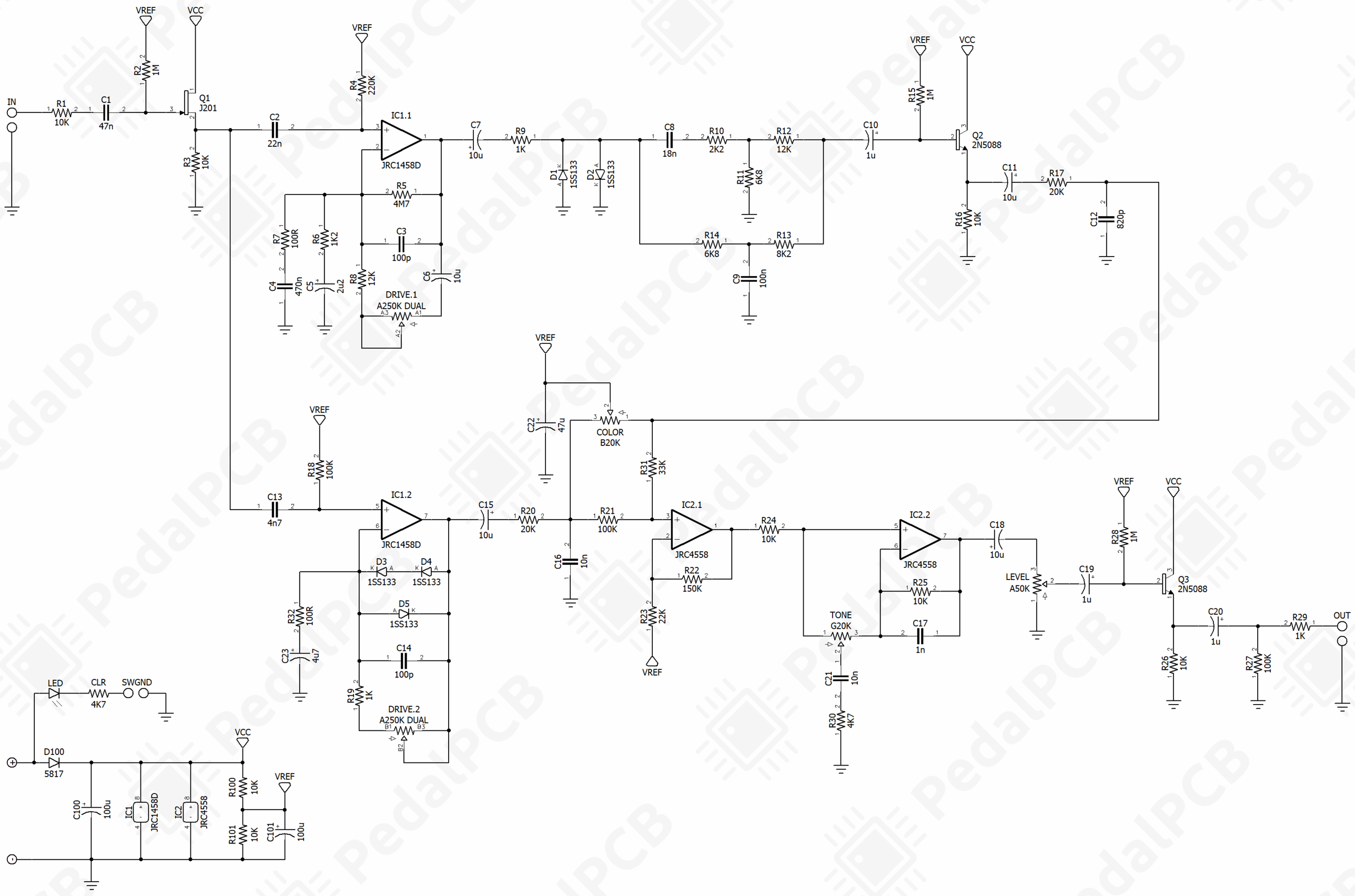
IN
R1 10K
C1 47n
VREF
R2 1M
VCC
Q1 J201
R3 10K
C2 22n
R4 220K
IC1.1
JRC1458D
R5 4M7
R7 100R
R6 1K2
C4 470n
C5 2u2
C3 100p
R8 12K
C6 10u
DRIVE.1
A250K DUAL
C7 10u
R9 1K
D1 1SS133
D2 1SS133
C8 18n
R10 2K2
R11 6K8
R12 12K
R14 6K8
R13 8K2
C9 100n
C10 1u
R15 1M
Q2 2N5088
C11 10u
R17 20K
R16 10K
C12 820p
C22 47u
COLOR
B20K
R31 33K
R18 100K
C13 4n7
IC1.2
JRC1458D
C15 10u
R20 20K
C16 10n
R21 100K
IC2.1
JRC4558
R22 150K
R23 22K
R24 10K
IC2.2
JRC4558
R25 10K
C17 1n
TONE
G20K
C21 10n
R30 4K7
C18 10u
LEVEL
A50K
C19 1u
R28 1M
Q3 2N5088
C20 1u
R29 1K
OUT
R26 10K
R27 100K
D3 1SS133
D4 1SS133
D5 1SS133
R32 100R
C23 4u7
C14 100p
R19 1K
DRIVE.2
A250K DUAL
LED
CLR 4K7
SWGND
D100 5817
C100 100u
IC1 JRC1458D
IC2 JRC4558
R100 10K
R101 10K
C101 100u