PedalPCB

Sandspur Fuzz

Revised 4/7/21

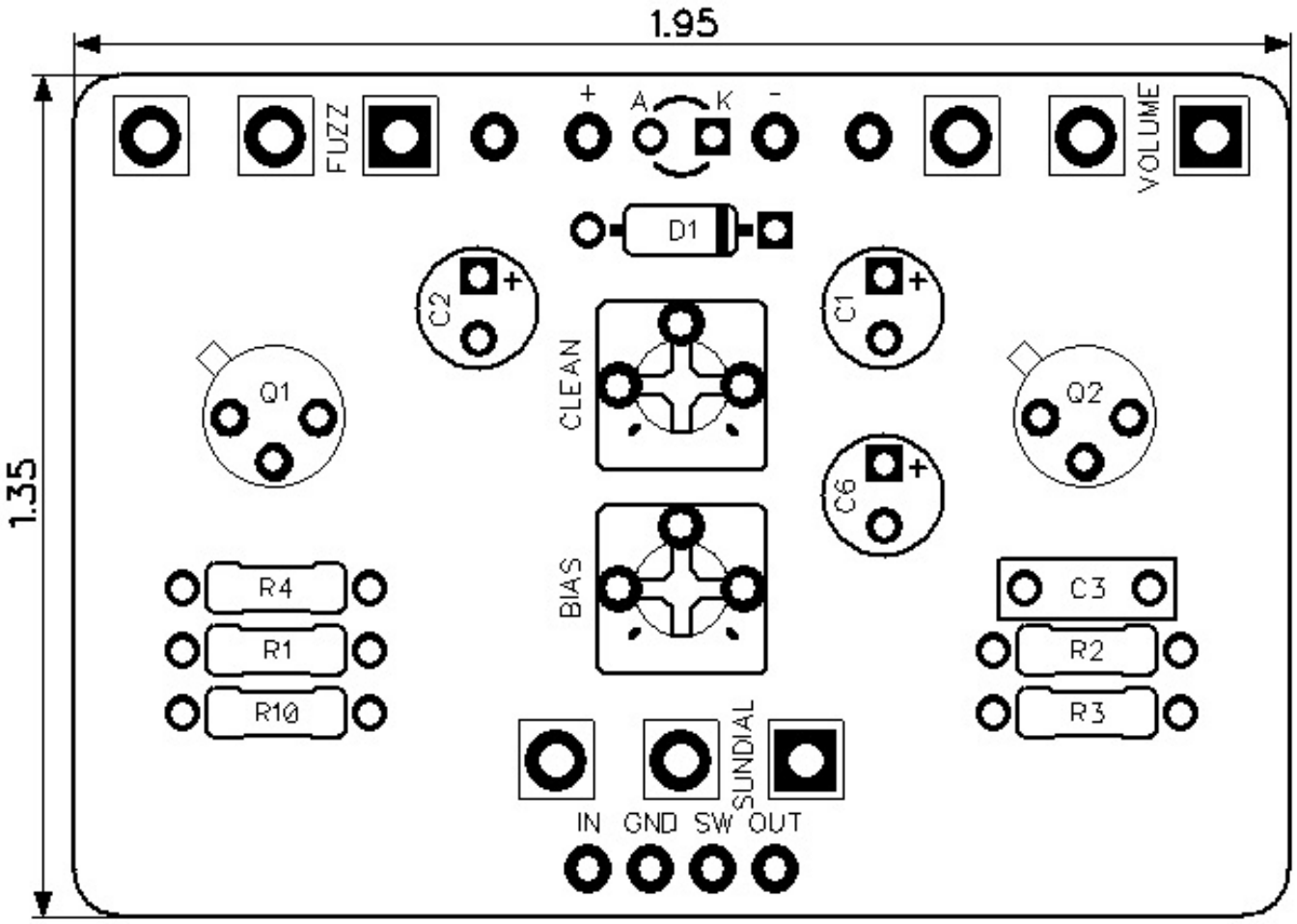

CONTROLS AND FEATURES

- **Volume**
- **Sundial**
- **Fuzz**

- **Clean (Internal Trimpot)**
- **Bias (Internal Trimpot)**

All trademarks and registered trademarks are the property of their respective owners. The company, product, and service names used in this web site are for identification purposes only. Use of these names, logos, and brands does not imply endorsement.

PedalPCB

Sandspur Fuzz

Parts List (Page 1 of 1)

LOCATION	VALUE	TYPE	NOTES
R1	100K	Resistor, 1/4W	
R2	33K	Resistor, 1/4W	
R3	1K	Resistor, 1/4W	
R4	470R	Resistor, 1/4W	
R10	4K7	Resistor, 1/4W	
C1	1u	Electrolytic capacitor, 5mm	
C2	22u	Electrolytic capacitor, 5mm	
C3	10n	Film capacitor, 7.2 x 2.5mm	
C6	47u	Electrolytic capacitor, 5mm	
D1	1N5817	Schottky diode, DO-41	
Q1	BC108	BJT transistor, NPN TO-18	
Q2	BC108	BJT transistor, NPN TO-18	
VOLUME	A250K	16mm right-angle PCB mount pot	
SUNDIAL	B5K	16mm right-angle PCB mount pot	
FUZZ	B1K	16mm right-angle PCB mount pot	
CLEAN	50K	Trim potentiometer (3362P type)	
BIAS	5K	Trim potentiometer (3362P type)	

Copyright © 2021 - PedalPCB.com

Sandspur Fuzz

Schematic Diagram

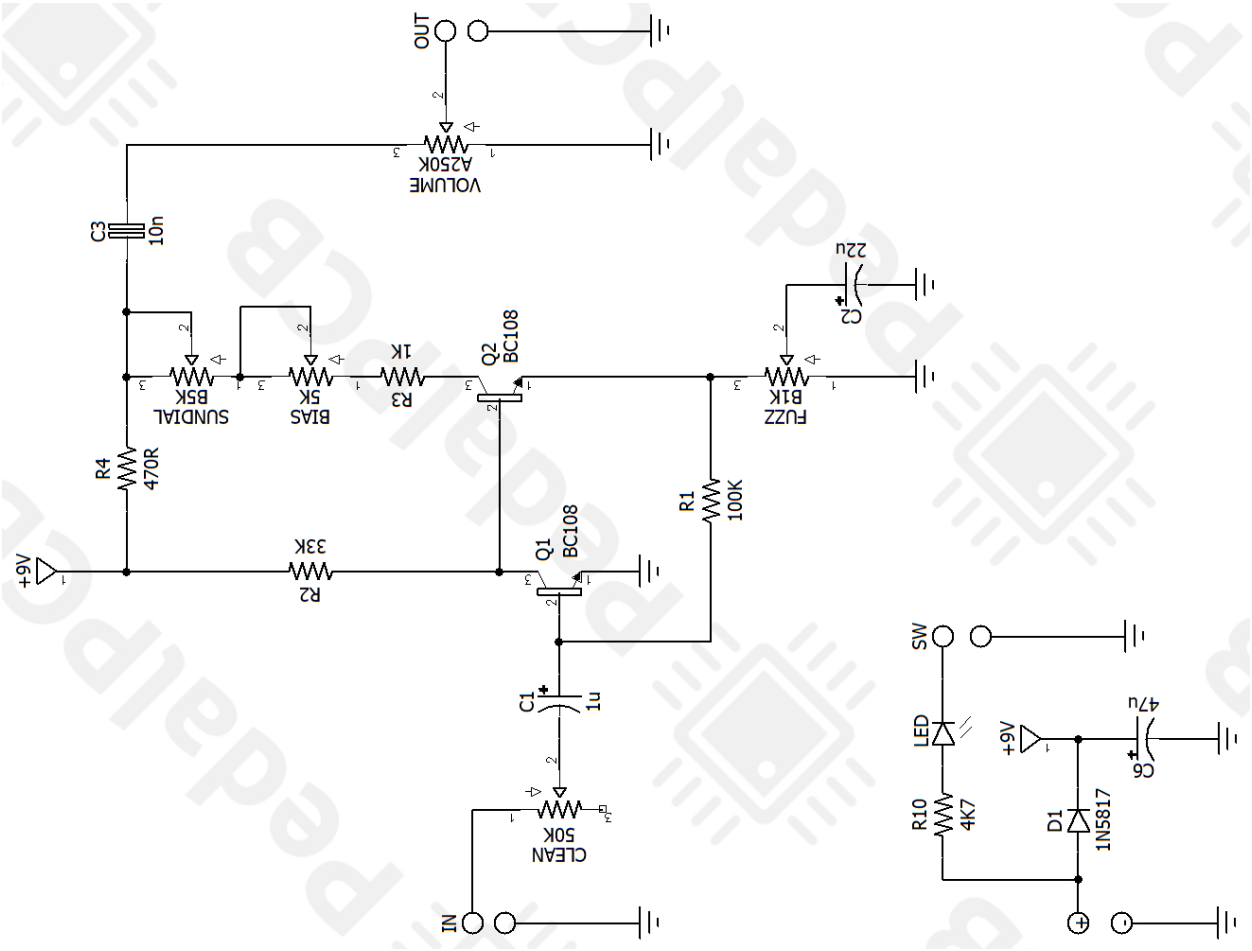

PedalPCB

Copyright © 2021 - PedalPCB.com

PedalPCB

Sandspur Fuzz

Wiring Diagram

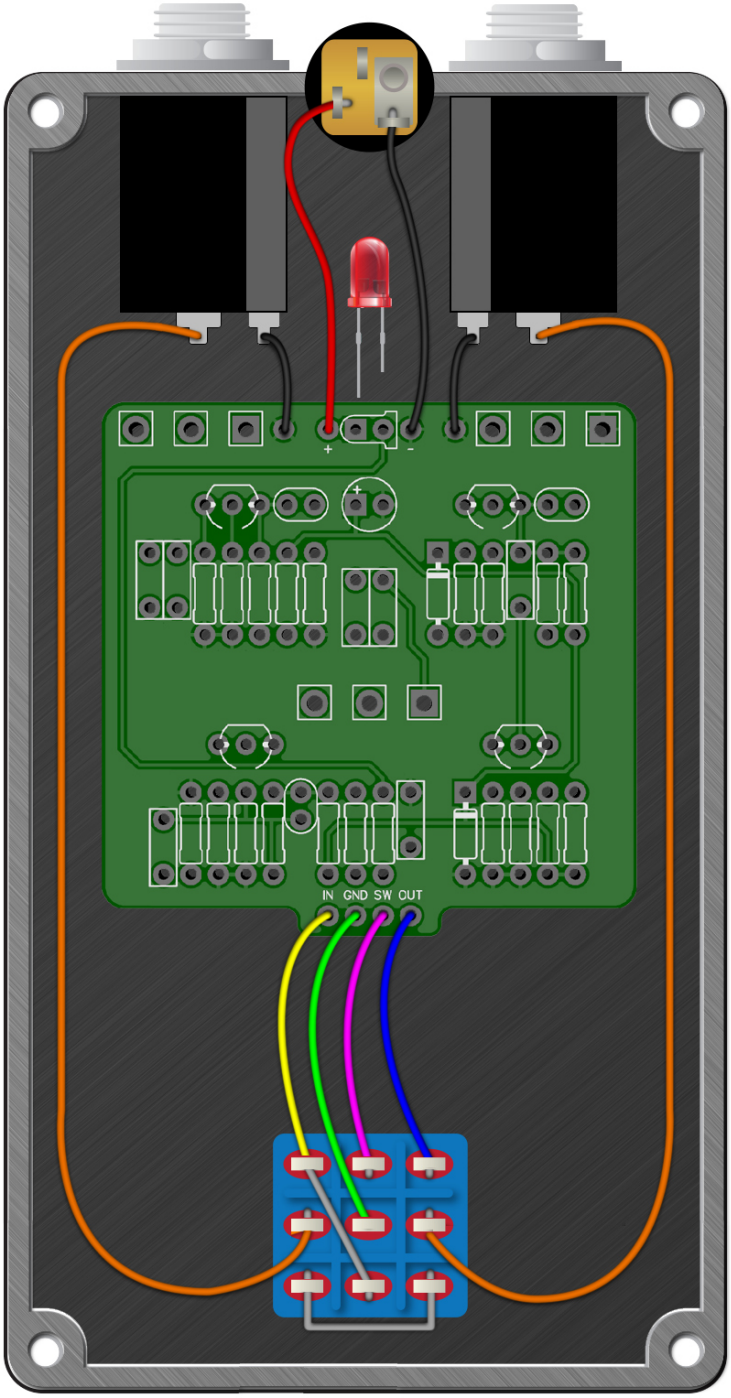

Copyright © 2021 - PedalPCB.com

Sandspur Fuzz

Drill Template

125B Enclosure

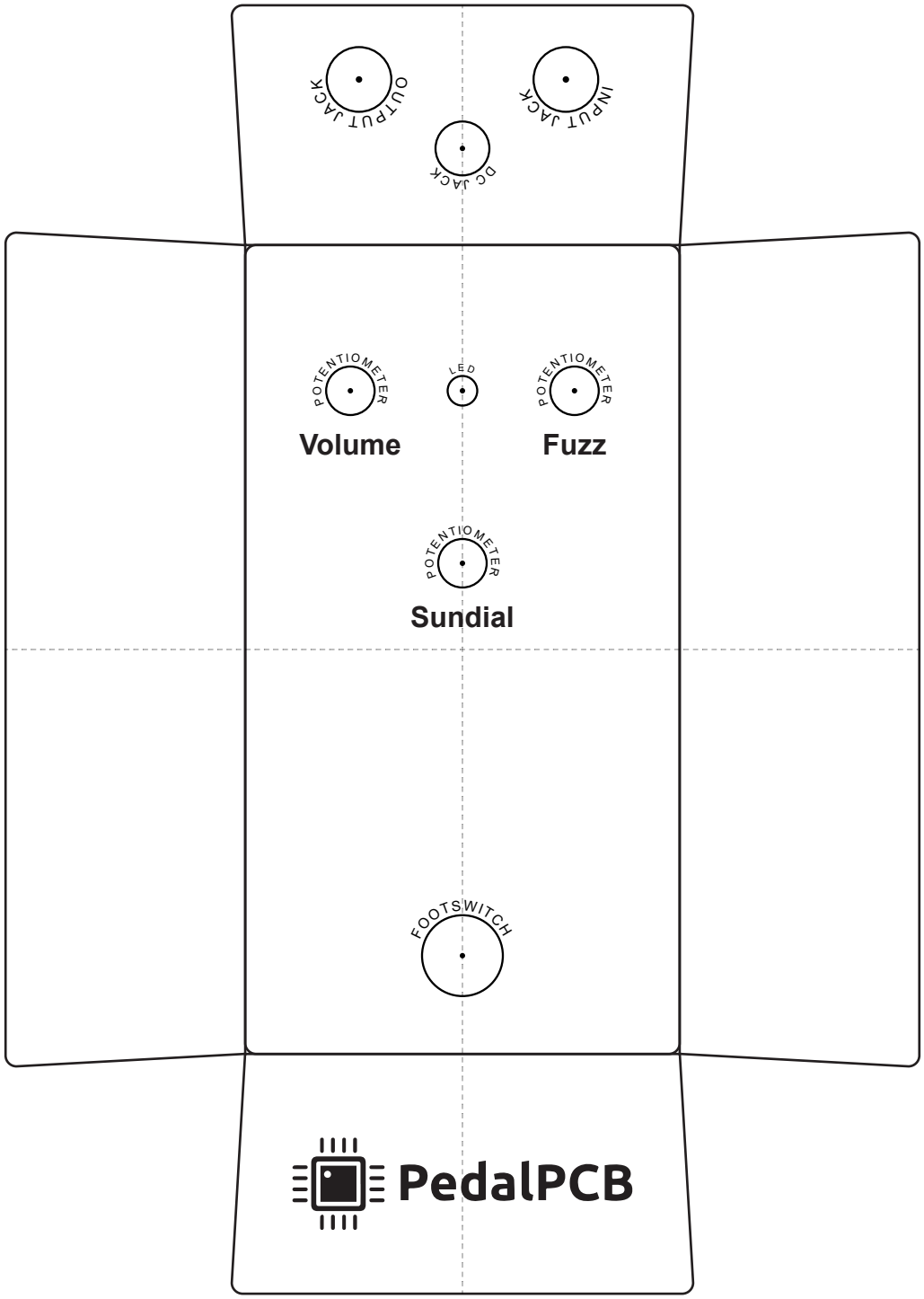

Copyright © 2021 - PedalPCB.com