PedalPCB

Little Huzzy Fuzz

Revised 12/19/23

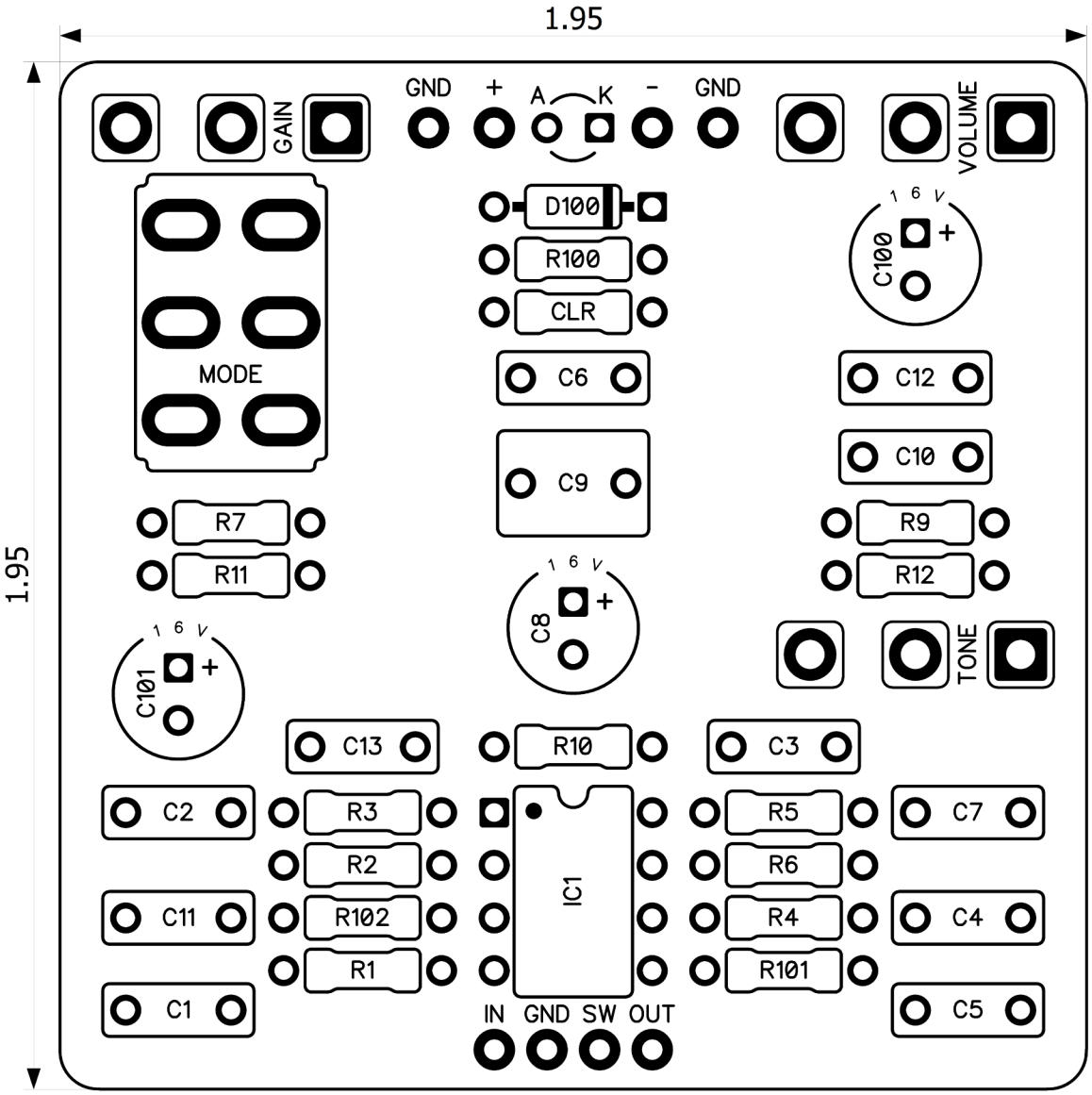

CONTROLS AND FEATURES

- **Volume**
- **Tone**
- **Gain**
- **Mode (Toggle switch)**

All trademarks and registered trademarks are the property of their respective owners. The company, product, and service names used in this web site are for identification purposes only. Use of these names, logos, and brands does not imply endorsement.

PedalPCB

Little Huzzy Fuzz

Parts List (Page 1 of 1)

LOCATION	VALUE	TYPE	NOTES
R1	1M	Resistor, 1/4W	
R2	22K	Resistor, 1/4W	
R3	1M	Resistor, 1/4W	
R4	10K	Resistor, 1/4W	
R5	390R	Resistor, 1/4W	
R6	130K	Resistor, 1/4W	
R7	470R	Resistor, 1/4W	
R9	27K	Resistor, 1/4W	
R10	30K	Resistor, 1/4W	
R11	1M5	Resistor, 1/4W	
R12	3K3	Resistor, 1/4W	
R100	68R	Resistor, 1/4W	
R101	100K	Resistor, 1/4W	
R102	100K	Resistor, 1/4W	
CLR	4K7	Resistor, 1/4W	** LED current limiting resistor*
C1	47n	Film capacitor, 7.2 x 2.5mm	
C2	180p	Ceramic capacitor	
C3	47n	Film capacitor, 7.2 x 2.5mm	
C4	47n	Film capacitor, 7.2 x 2.5mm	
C5	100p	Ceramic capacitor	
C6	68n	Film capacitor, 7.2 x 2.5mm	
C7	220p	Ceramic capacitor	
C8	10u	Electrolytic capacitor, 5mm	
C9	220n	Film capacitor, 7.2 x 5.0mm	
C10	6n8	Film capacitor, 7.2 x 2.5mm	
C11	100n	Film capacitor, 7.2 x 2.5mm	
C12	100n	Film capacitor, 7.2 x 2.5mm	
C13	47p	Ceramic capacitor	
C100	100u	Electrolytic capacitor, 5mm	
C101	10u	Electrolytic capacitor, 5mm	
D100	1N5817	Schottky diode, DO-41	
IC1	TL072	Dual op-amp, DIP8	
VOLUME	B25K	16mm right-angle PCB mount pot	
GAIN	A1M	16mm right-angle PCB mount pot	
TONE	B25K	16mm right-angle PCB mount pot	
MODE	ON/ON	Toggle switch, DPDT	2-position (ON/ON)

Copyright © 2023 - PedalPCB.com

PedalPCB

Little Huzzy Fuzz

Schematic Diagram

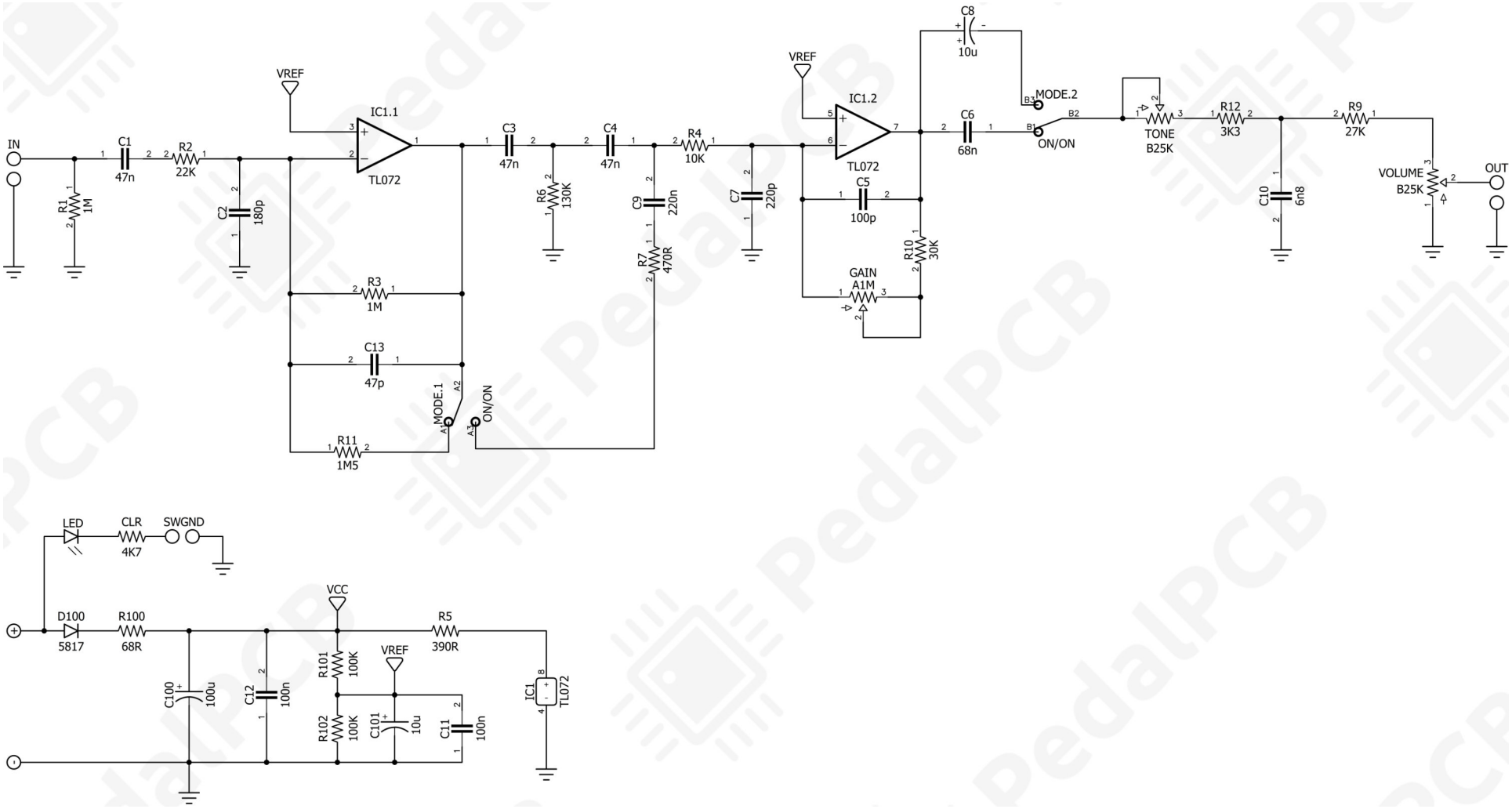

Copyright © 2022 - PedalPCB.com

PedalPCB

Little Huzzy Fuzz

Wiring Diagram

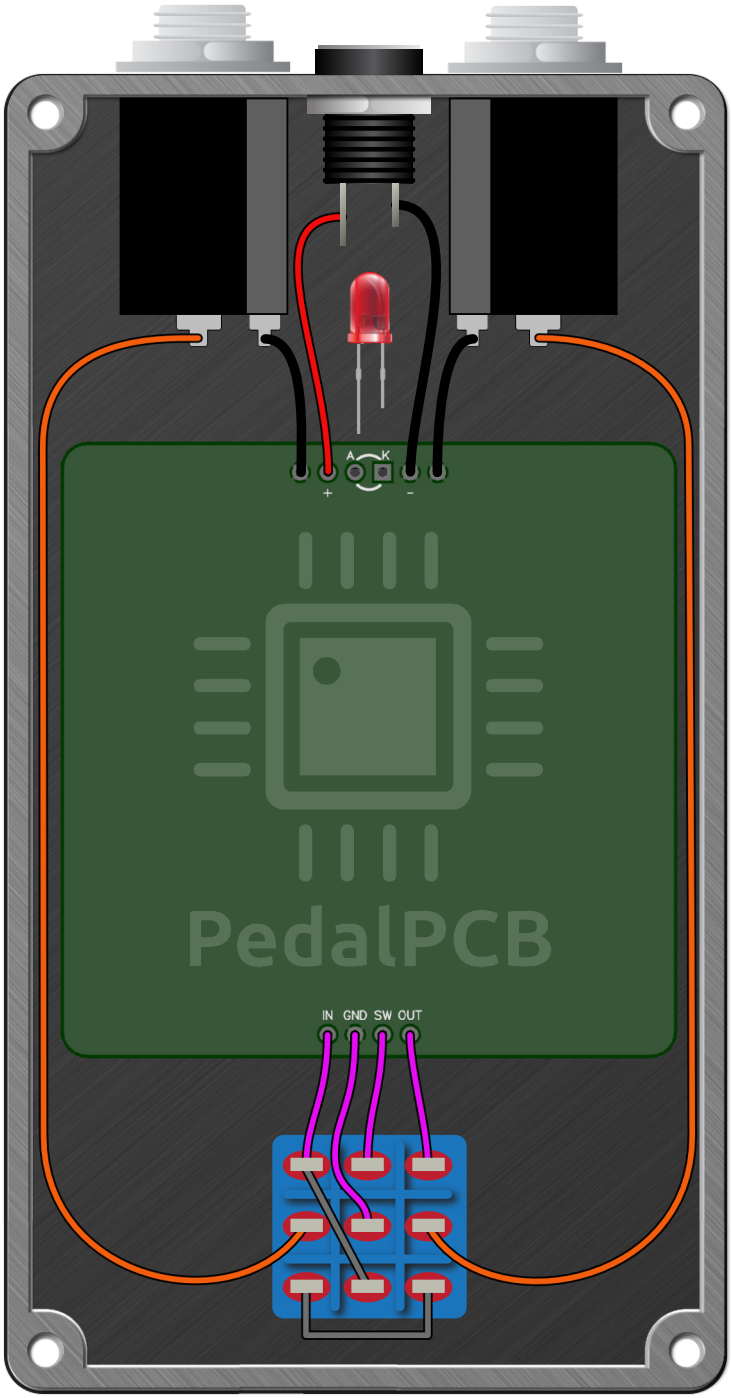

Copyright © 2023 - PedalPCB.com

PedalPCB

Little Huzzy Fuzz

Drill Template

125B Enclosure

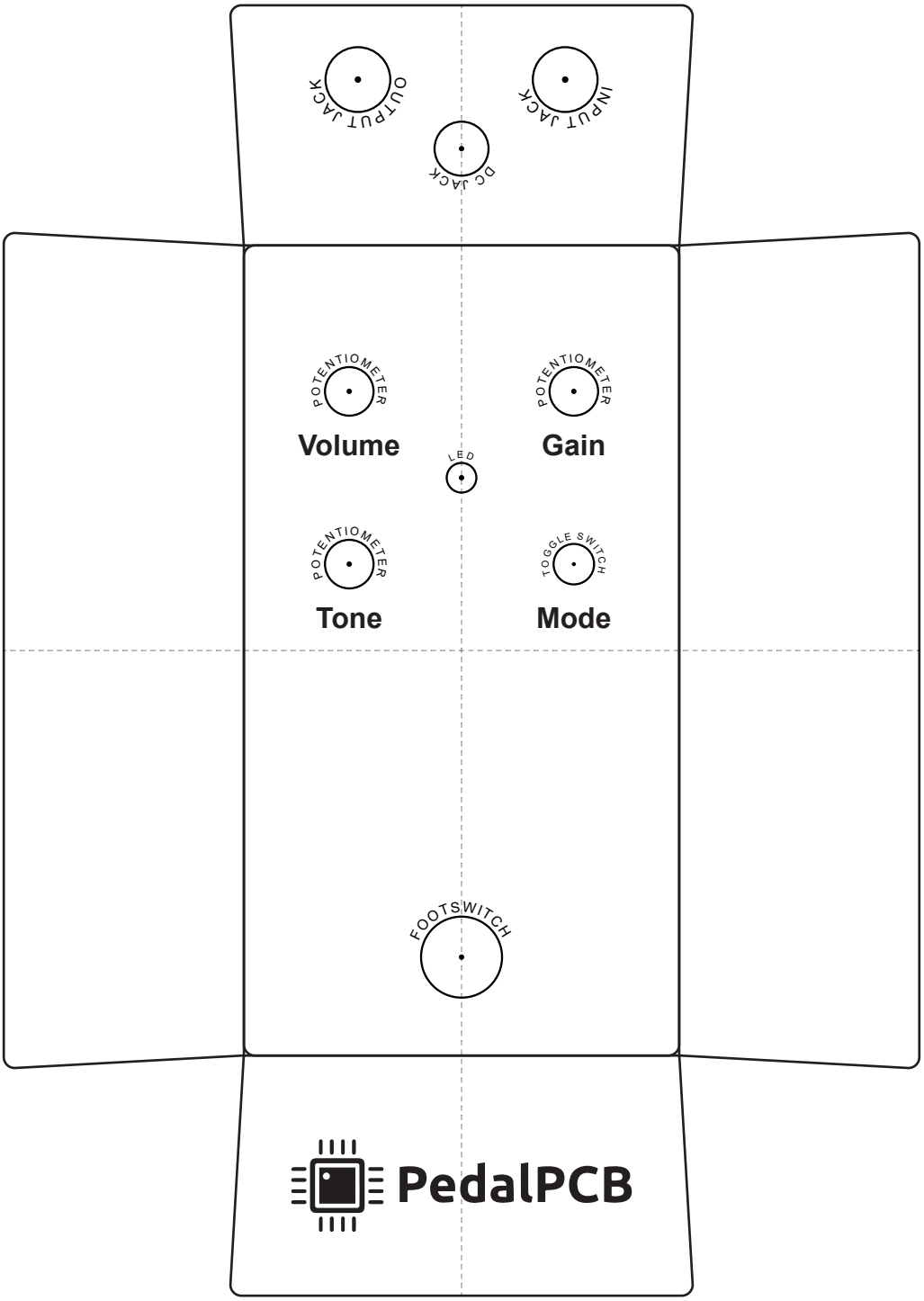

Copyright © 2023 - PedalPCB.com