Equilux Equalizer

Revised 11/8/24

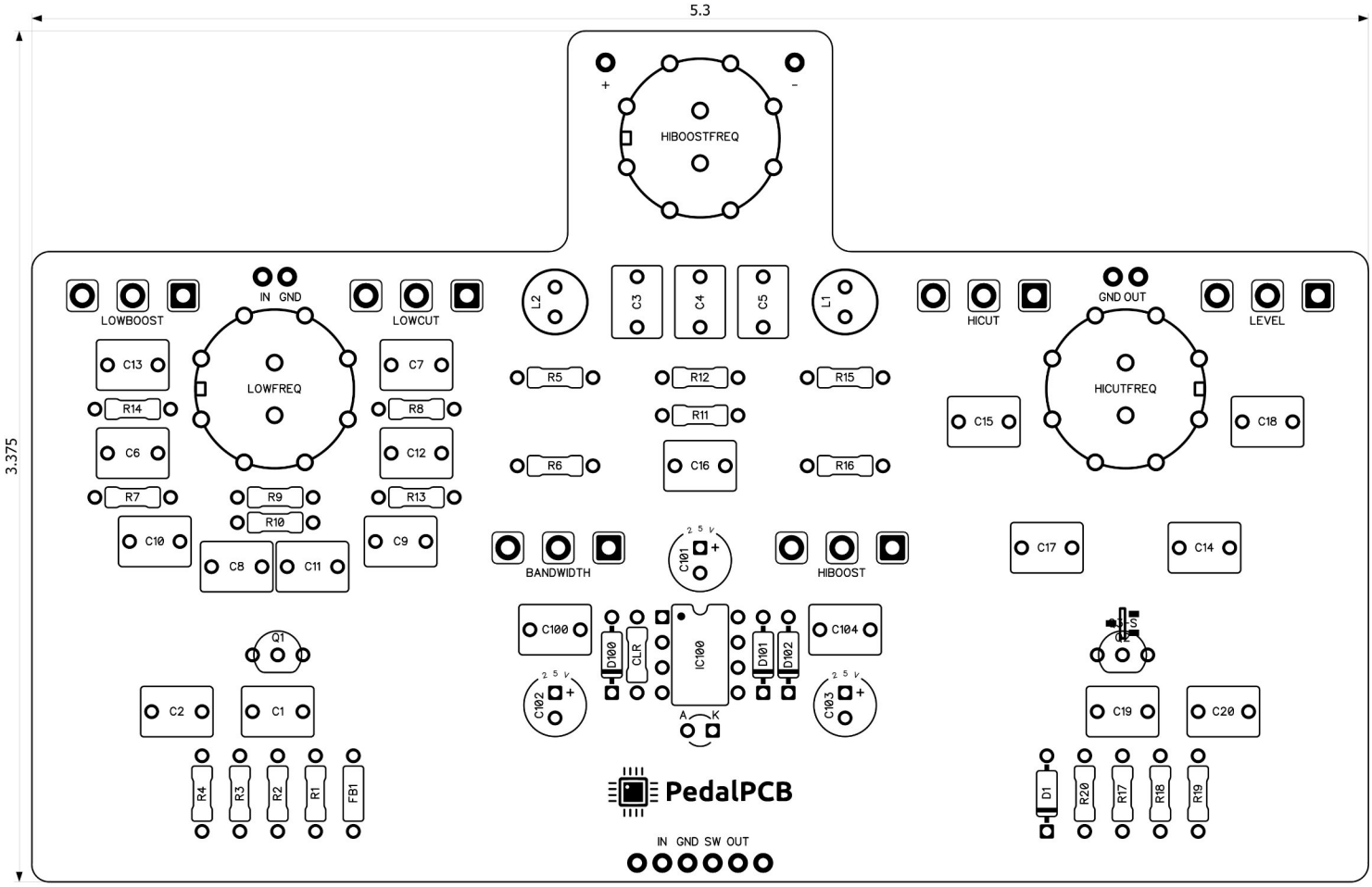

CONTROLS AND FEATURES

- **Level**
- **High Cut Frequency (Rotary switch)**
- **High Cut**
- **High Boost Frequency (Rotary switch)**
- **High Boost**
- **Low Frequency (Rotary switch)**
- **Low Cut**
- **Low Boost**
- **Bandwidth**

All trademarks and registered trademarks are the property of their respective owners. The company, product, and service names used in this web site are for identification purposes only. Use of these names, logos, and brands does not imply endorsement.

PedalPCB

Equilux Equalizer

Parts List (Page 1 of 2)

LOCATION	VALUE	TYPE	NOTES
R1	1M	Resistor, 1/4W	
R2	1M	Resistor, 1/4W	
R3	1M	Resistor, 1/4W	
R4	10K	Resistor, 1/4W	
R5	4K7	Resistor, 1/4W	
R6	1M	Resistor, 1/4W	
R7	1M	Resistor, 1/4W	
R8	1M	Resistor, 1/4W	
R9	1M	Resistor, 1/4W	
R10	1M	Resistor, 1/4W	
R11	1K	Resistor, 1/4W	
R12	10K	Resistor, 1/4W	
R13	1M	Resistor, 1/4W	
R14	1M	Resistor, 1/4W	
R15	100R	Resistor, 1/4W	
R16	1M	Resistor, 1/4W	
R17	10K	Resistor, 1/4W	
R18	20K	Resistor, 1/4W	
R19	2K2	Resistor, 1/4W	
R20	20K	Resistor, 1/4W	
CLR	4K7	Resistor, 1/4W	** LED current limiting resistor*
C1	220n	Film capacitor, 7.2 x 5.0mm	
C2	1u	Film capacitor, 7.2 x 5.0mm	
C3	220n	Film capacitor, 7.2 x 5.0mm	
C4	68n	Film capacitor, 7.2 x 2.5mm	
C5	33n	Film capacitor, 7.2 x 2.5mm	
C6	47n	Film capacitor, 7.2 x 2.5mm	
C7	1u	Film capacitor, 7.2 x 5.0mm	
C8	22n	Film capacitor, 7.2 x 2.5mm	
C9	470n	Film capacitor, 7.2 x 5.0mm	
C10	330n	Film capacitor, 7.2 x 5.0mm	
C11	15n	Film capacitor, 7.2 x 2.5mm	
C12	10n	Film capacitor, 7.2 x 2.5mm	
C13	220n	Film capacitor, 7.2 x 5.0mm	
C14	150n	Film capacitor, 7.2 x 5.0mm	
C15	330n	Film capacitor, 7.2 x 5.0mm	
C16	220n	Film capacitor, 7.2 x 5.0mm	
C17	150n	Film capacitor, 7.2 x 5.0mm	
C18	68n	Film capacitor, 7.2 x 2.5mm	
C19	82p	Ceramic capacitor	
C20	1u	Film capacitor, 7.2 x 5.0mm	
C100	100n	Film capacitor, 7.2 x 2.5mm	
C101	100u	Electrolytic capacitor, 5mm	
C102	10u	Electrolytic capacitor, 5mm	
C103	100u	Electrolytic capacitor, 5mm	
C104	100n	Film capacitor, 7.2 x 2.5mm	
		Continued on next page…	

Copyright © 2023 - PedalPCB.com

PedalPCB

Equilux Equalizer

Parts List (Page 2 of 2)

LOCATION	VALUE	TYPE	NOTES
D1	1N4148	Signal diode, DO-35	
D100	1N5817	Schottky diode, DO-41	
D101	1N5817	Schottky diode, DO-41	
D102	1N5817	Schottky diode, DO-41	
FB1	FB	Ferrite Bead	
L1	47mH	47mH Radial Inductor	Link
L2	47mH	47mH Radial Inductor	Link
Q1	2N7000	N-Channel MOSFET	
Q2	LND150-N3	N-Channel MOSFET	Link
IC100	TC1044**S**CPA	Charge pump IC, DIP8	
LEVEL	B100K	16mm right-angle PCB mount pot	
LOWBOOST	B10K	16mm right-angle PCB mount pot	
LOWCUT	A100K	16mm right-angle PCB mount pot	
HICUT	B1K	16mm right-angle PCB mount pot	
HIBOOST	C10K	16mm right-angle PCB mount pot	
BANDWIDTH	A10K	16mm right-angle PCB mount pot	
LOWFREQ	2P4T	16mm Mini Rotary switch, 2P4T	
HIBOOSTFREQ	2P4T	16mm Mini Rotary switch, 2P4T	
HICUTFREQ	2P4T	16mm Mini Rotary switch, 2P4T	

Copyright © 2023 - PedalPCB.com

PedalPCB

Equilux Equalizer

Schematic Diagram

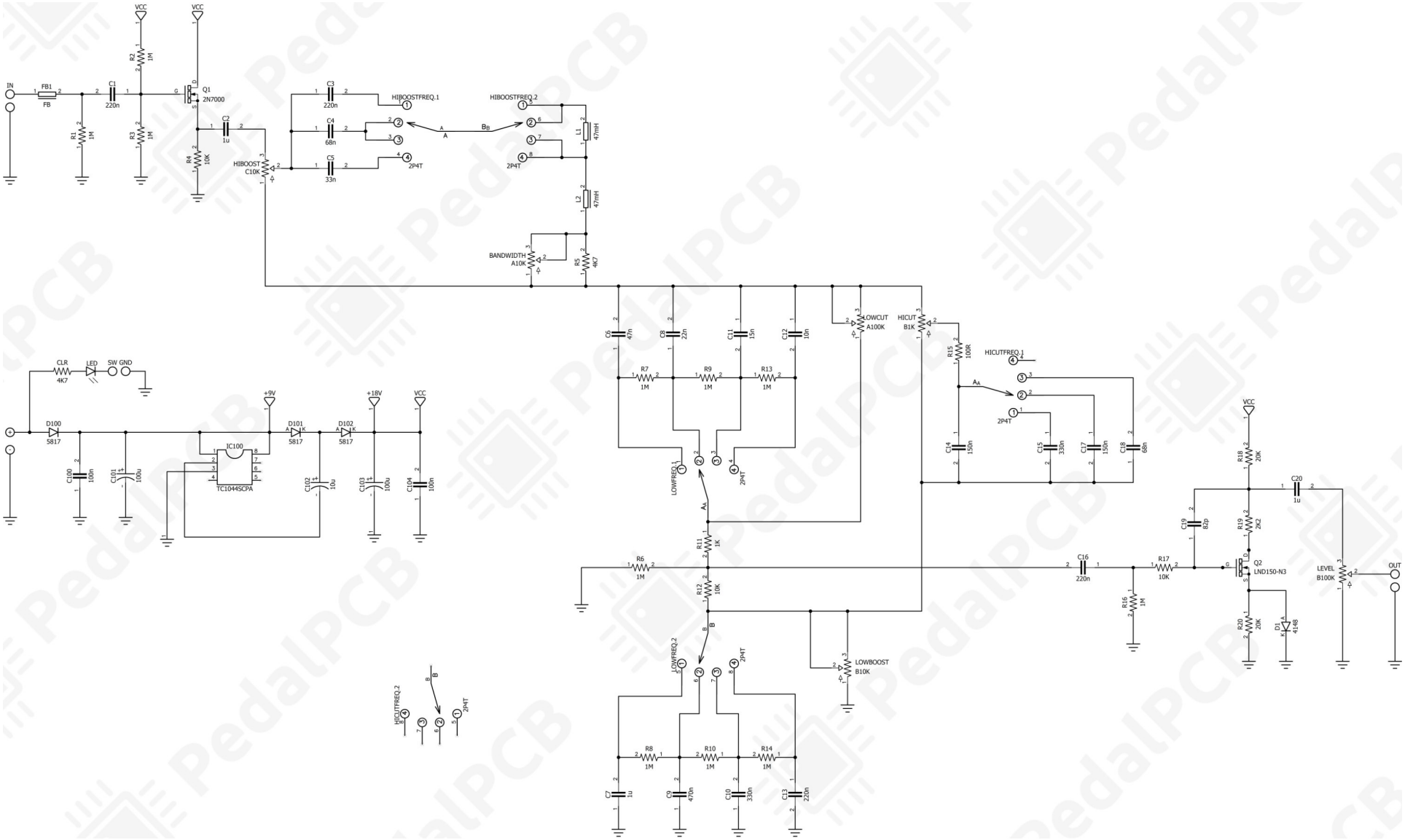

Copyright © 2022 - PedalPCB.com

PedalPCB

Equilux Equalizer

Wiring Diagram (with breakout board)

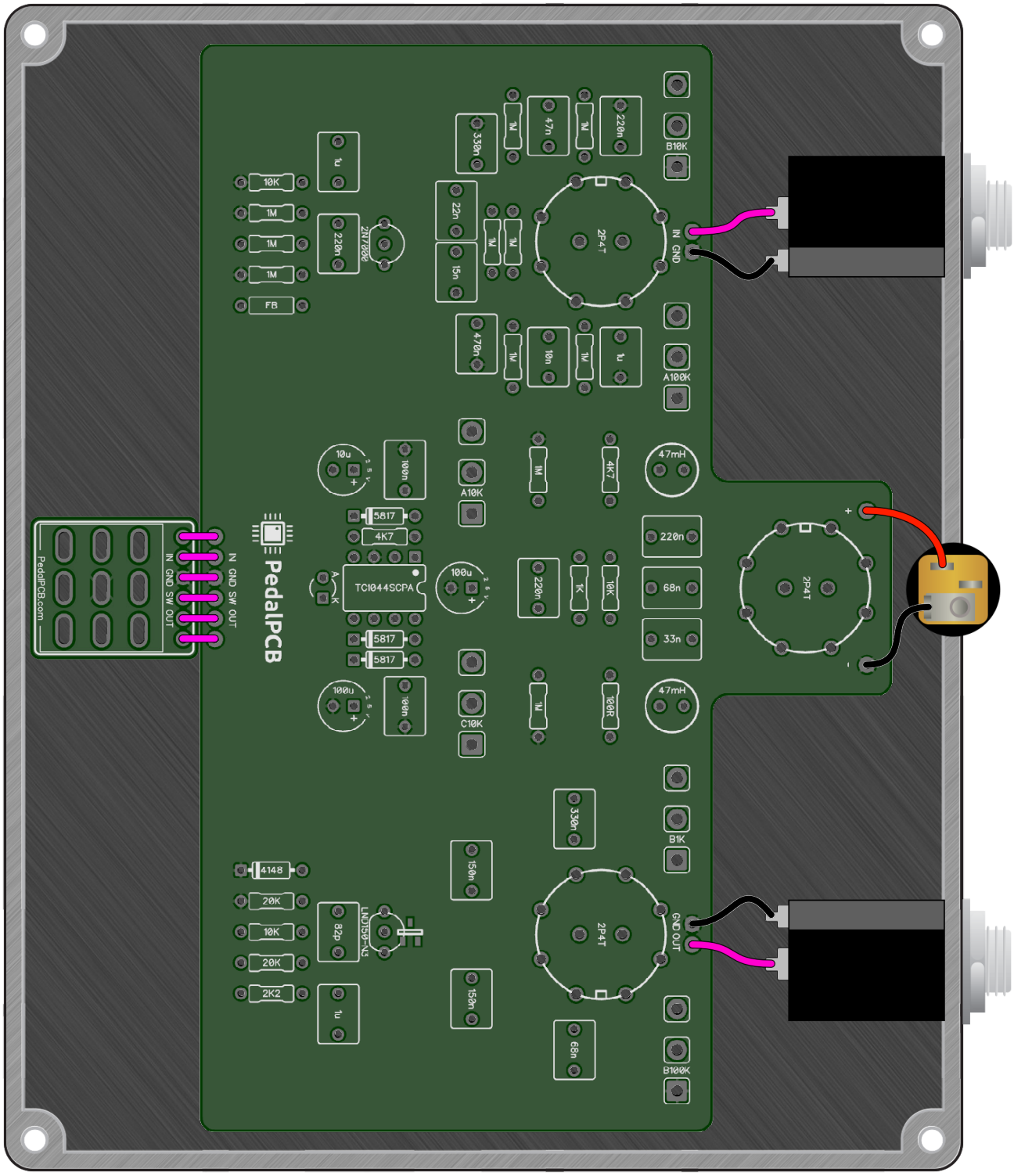

PedalPCB

Equilux Equalizer

Wiring Diagram (without breakout board)

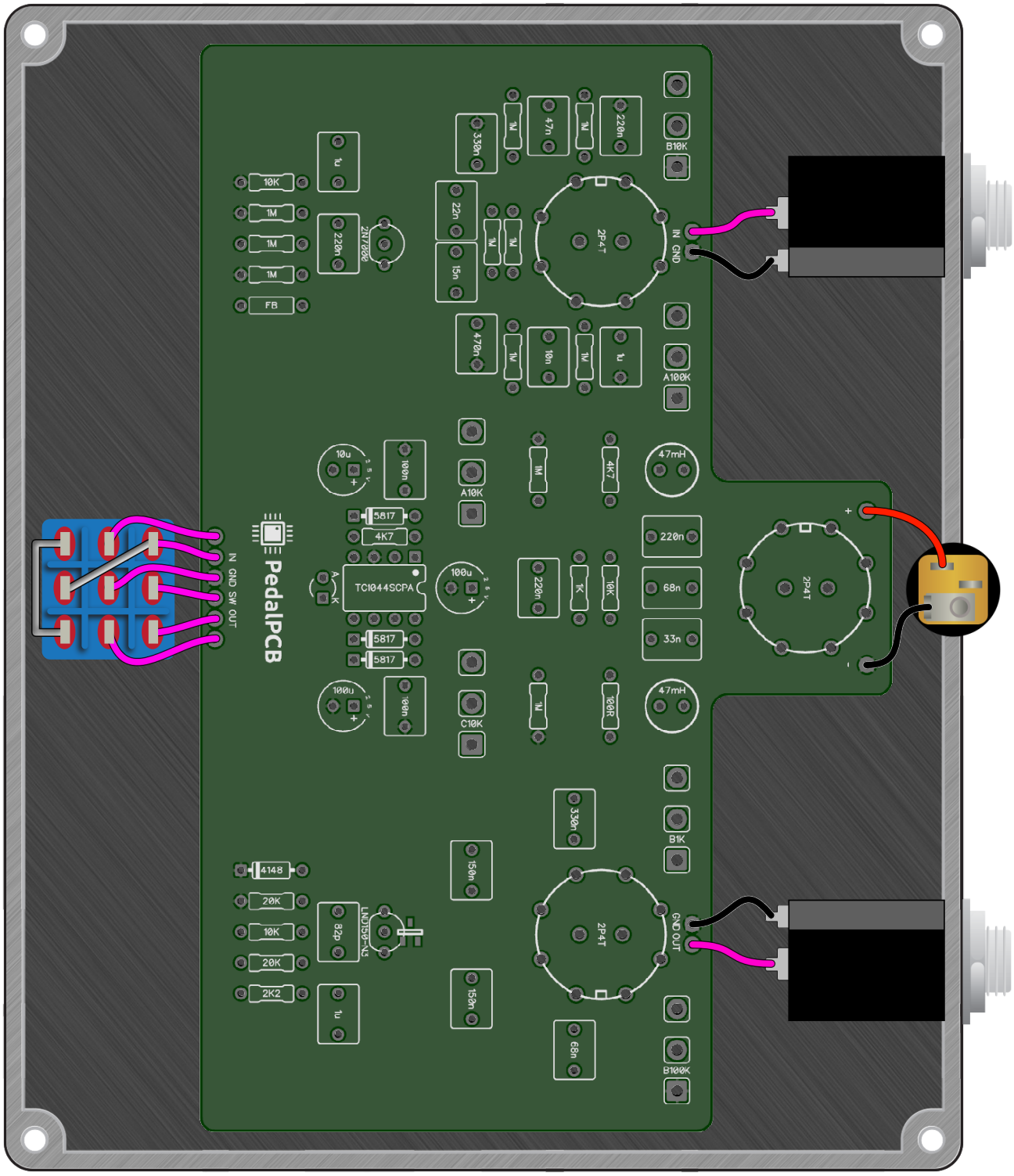

Equilux Equalizer

Drill Template (4S6500 / 1590XX)

PedalPCB

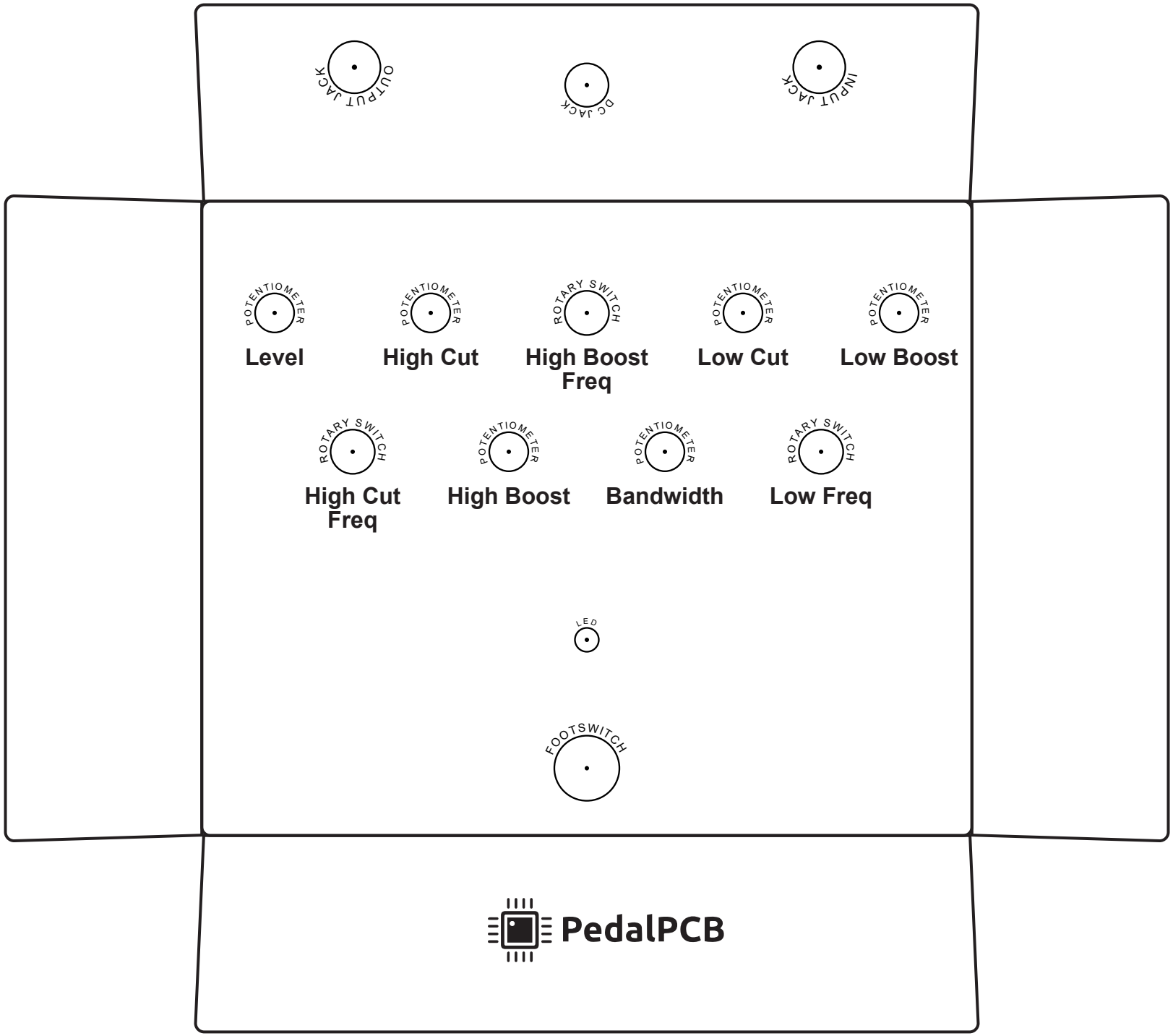

Copyright © 2022 - PedalPCB.com